CB200W Water Leak Detection Panel
Installation and Commissioning Manual

Contents

1. Introduction 2
2. CB200W – A guided Tour 3
3. Cabinet Installation.....8
4. Panel Check.....10
5. Panel Configuration.....12
6. Commissioning.....13
7. Technical Specifications.....19
8. Additional Available Documentation 20
9. ACCESS CODE Functions.....21

1. Introduction

NOTE: It is important to read this manual fully before commencing installation.

USER CONTROLS ACCESS CODE:
5 1 4
ENGINEER'S ACCESS CODE:
5 3 2 4

SEE SECTION 8 FOR DETAILS

THIS PANEL HAS BEEN TESTED FOR COMPATIBILITY WITH THE HYDROSENSE HYDROWIRE AND POINT DETECTOR ONLY.

1.1 Hydrosense Hydrowire

The Hydrosense Hydrowire is best suited to areas such as floors, concealed floors, ducts and suspended ceilings. Hydrowire is a flexible 4-core cable which is highly sensitive to water. It is generally available in 5-metre or 10-metre lengths, with a male DIN plug at one end and a female DIN socket at the other end. This allows for cables to be easily attached together up to a maximum length of 50 metres. The Hydrowire must be connected to a control box which contains circuitry to signal back to the CB200W panel when water is detected. An End-Of-Line plug is fitted at the furthest end of the Hydrowire cable so that the CB200W panel can monitor the cable for open and short circuit faults. The End-Of-Line plug must have a 22uF non-polarised capacitor fitted as the EOL device.

The control box has connections for an optional Remote LED indicator. Only one indicator should be connected to each box.

Only one control box (and hence one length of Hydrowire cable) can be connected to each zone on the CB200W panel.

1.2 Hydrosense Point Detection

The Hydrosense Point Detection Probe is best suited to areas which require localised detection such as drip trays, storage areas and lift shafts. The point detection probe contains all the circuitry necessary to detect a water leak and signal this back to the CB200W panel. Multiple point detectors can be connected to each zone on the CB200W. A junction box is required for each point detection probe to allow for correct wiring from the panel to the probe. Up to 20 point detection probes can be connected to each zone. The probe has an integral green LED for easy location of the leak.

2. CB200W – A guided Tour

2.1 Exploded View and Mechanical Data/Text Identification

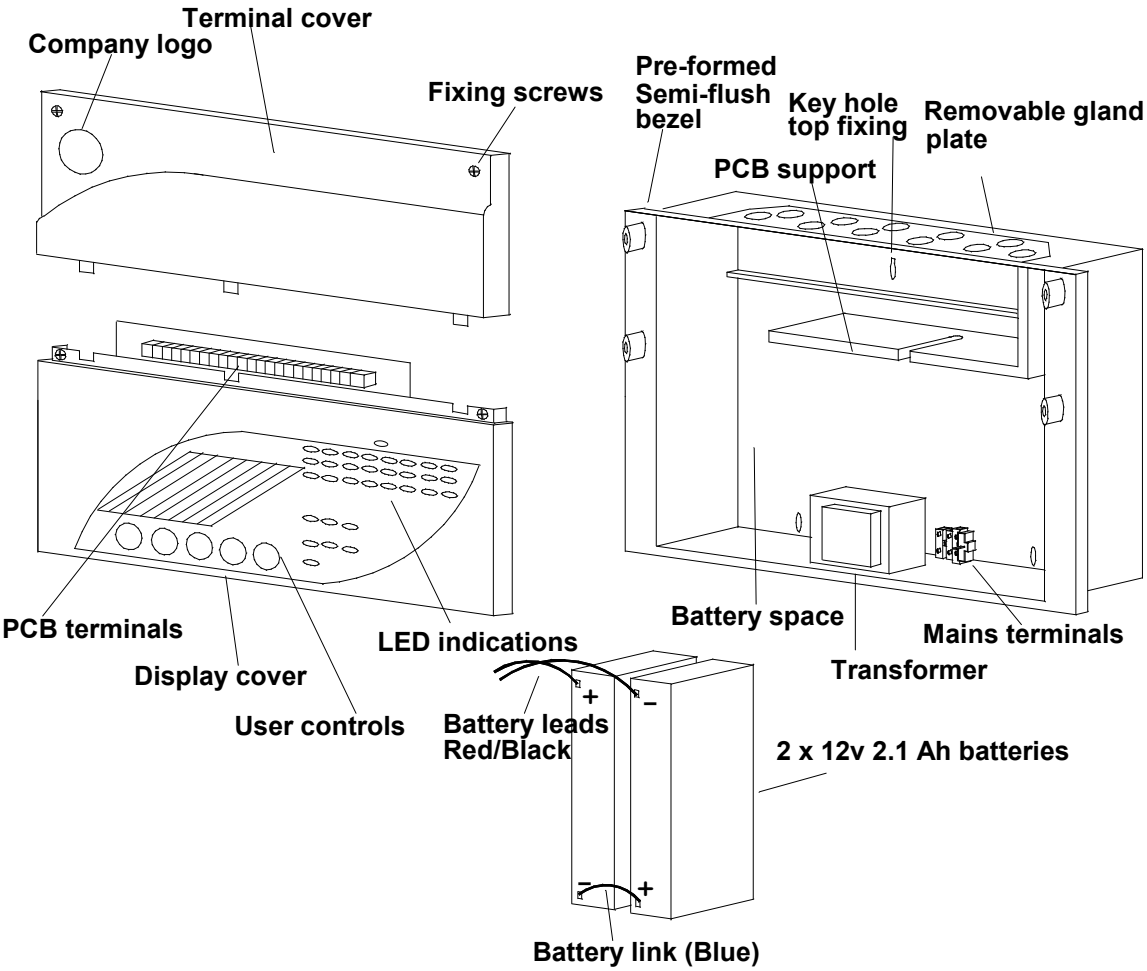

2.2 Panel Display and Explanatory Notes (8 zone illustrated)

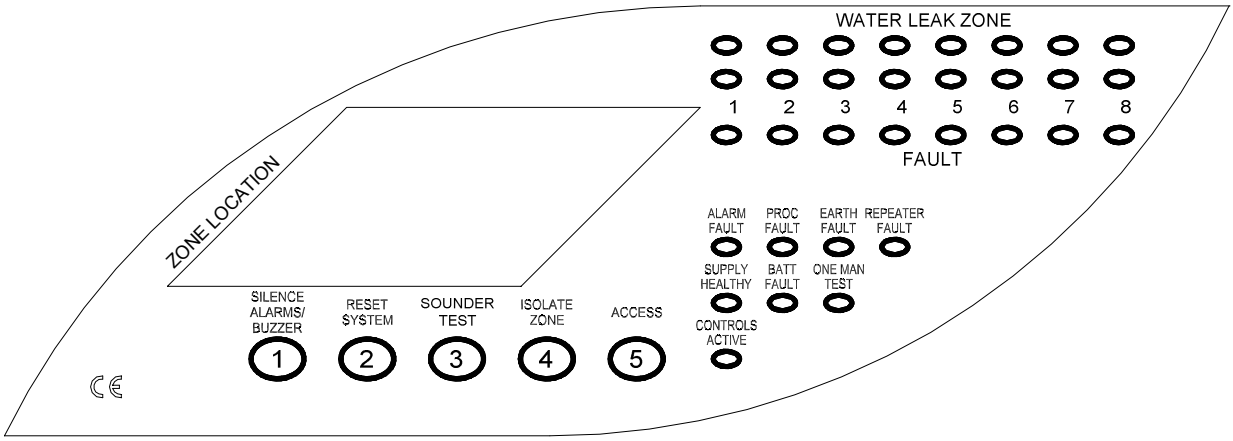

INDICATION	DESCRIPTION
ZONE LOCATION	Slide-in card to add zone identification text
WATER LEAK ZONE – Twin RED LEDs	Water Leak Detected LEDs illuminate flashing when a zone detects a water leak. Illuminates steady after silence alarms has been pressed.
WATER LEAK ZONE – YELLOW LED	Zone fault LEDs illuminate flashing with any zone fault. Illuminates steady when zone is isolated.
ALARM FAULT LED	Flashes when an alarm circuit is in fault.
PROC FAULT LED	Flashes when a processor fault occurs.
EARTH FAULT LED	Flashes when an earth fault occurs (4-8 zone only).
REPEATER FAULT LED	Flashes when a repeater fault occurs (4-8 zone only).
SUPPLY HEALTHY LED	Illuminates when both mains and battery supplies are healthy.
BATT FAULT LED	Flashes when a battery supply fault occurs.
ONE MAN TEST LED	Flashes when engineer's one man test is active. (4-8 zone only).
CONTROLS ACTIVE LED	Illuminates when controls are active.

CONTROL	DESCRIPTION
SILENCE ALARMS/BUZZER	Press to silence alarm circuits or fault buzzer.
RESET SYSTEM	Panel system control to reset system after Silence Alarms has been pressed. Functions as Test LEDs at any other time.
SOUNDER TEST	Operates alarms circuits (but not aux alarm output relay). Press to operate, press again to stop.
ISOLATE ZONE	Zone isolate control.
ACCESS	Press to access user control facility then press 1 4, controls are then enabled. Repeat above to disable controls.

2.3 Typical Terminal Wiring Schematic (8 zone illustrated)

Note: This is a schematic representation only and not a PCB layout drawing.

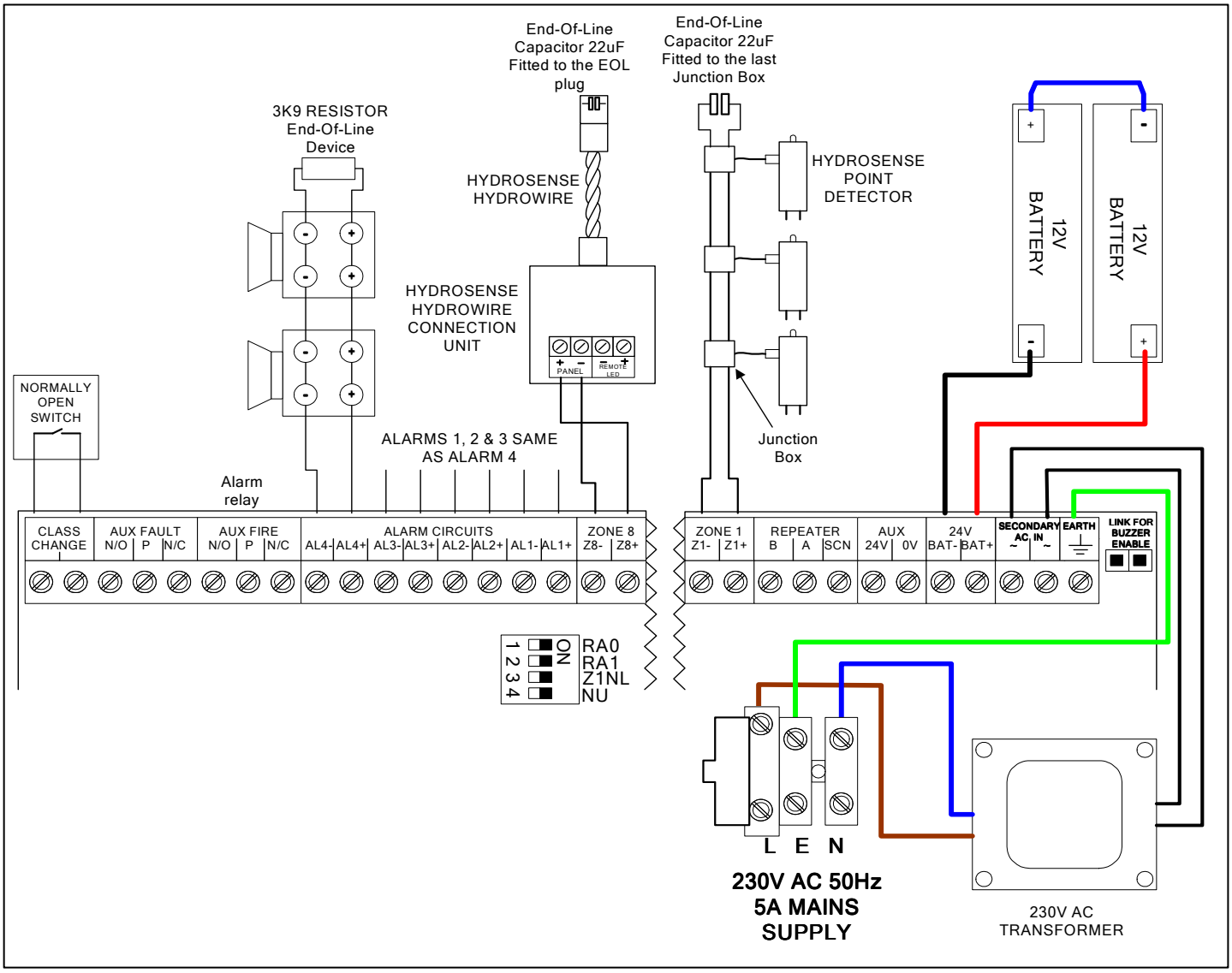

2.4 Typical Leak Detector Wiring

2.4.1. Hydrosense Point Detector

The Hydrosense point detector is a device which detects water at a single location via two pins which are positioned such that when water is present, the tips of the pins are immersed in the water.

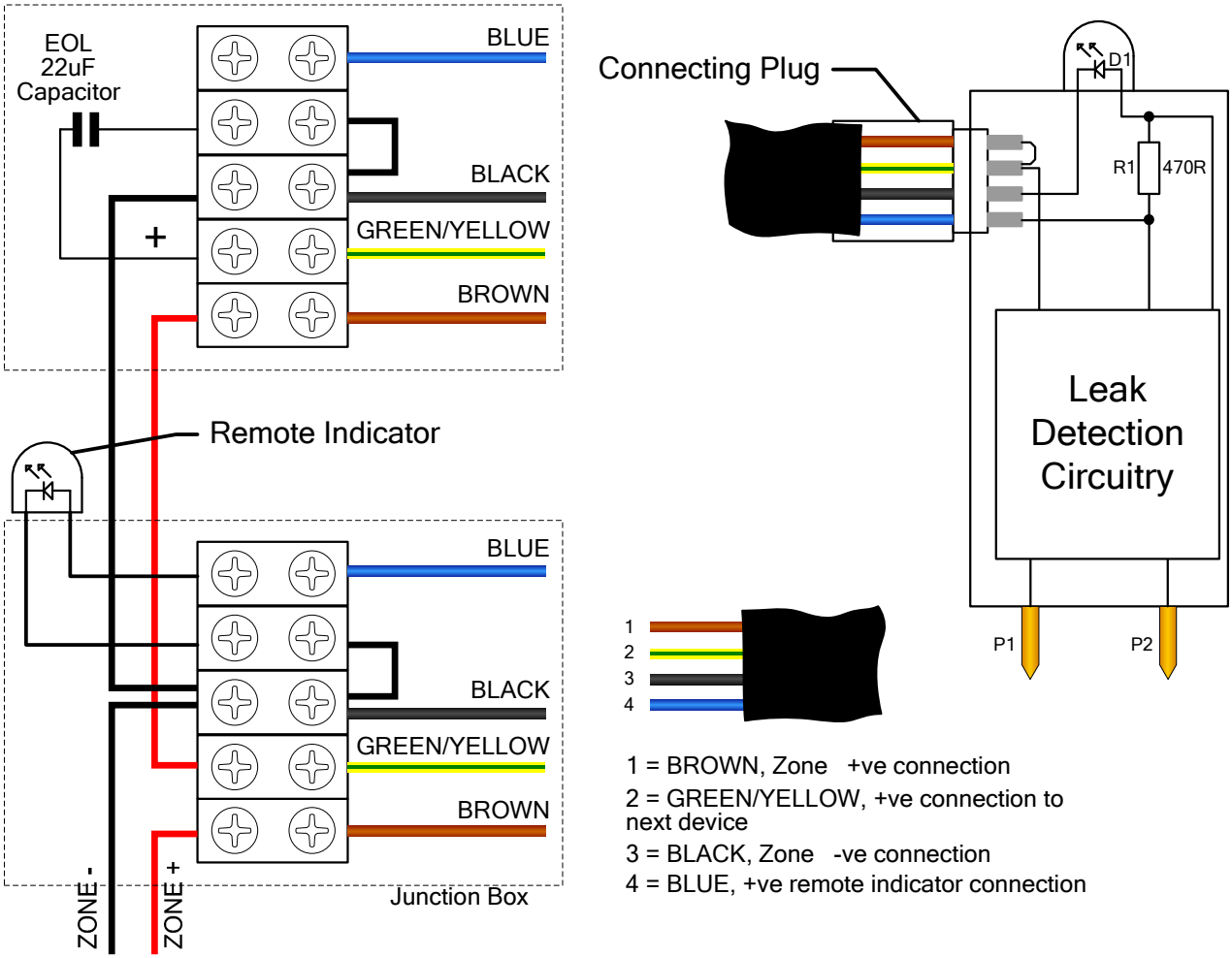

The zone wiring is taken to a junction box. The wires to the Point detector are then connected to the junction box. The zone wiring can then be extended to the next junction box or an EOL capacitor can be fitted if this is the last junction box.

2. Hydrosense Hydrowire System

The Hydrosense Hydrowire detection system has three components:

1. Hydrowire Connection Unit
2. Hydrowire cable
3. End-Of-Line Device

The Hydrowire connection Unit is connected to the zone circuit on the panel and generates the actual alarm condition. The Hydrowire cable is connected to the Connection Unit and the End-Of-Line device is connected to the end of the Hydrowire cable.

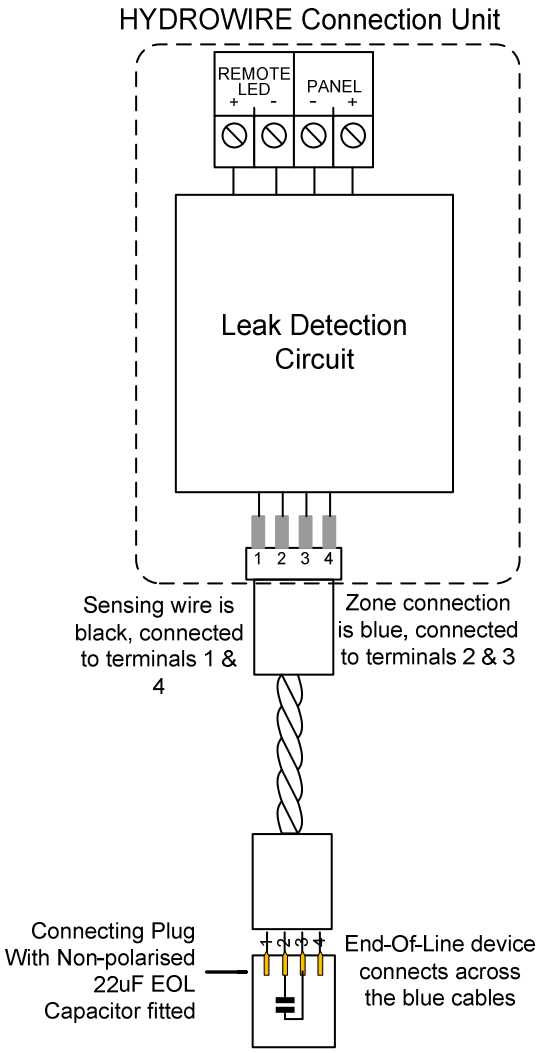

The Hydrowire cable is composed of two black wires and two blue wires. The black wires are the water sensing wires, while the blue wires carry the zone circuit to the end-of-line device.

Only one Hydrowire Connection Unit can be connected to a zone. The Hydrowire must have an End-Of-Line plug fitted, with a 22uF capacitor fitted across pins 2 & 3 of the plug. The capacitor should be a non-polarised type because the polarity of pins 2 & 3 cannot be determined without testing.

3. Cabinet Installation

WARNING: ***Read this section completely before commencing installation.***

Prior to commencing installation of the control panel, ensure that adequate precautions are taken to prevent damage to the sensitive electronic components on the control board due to electrostatic discharge. You should discharge any static electricity you may have accumulated by touching a convenient earthed object such as an unpainted copper radiator pipe. You should repeat the process at regular intervals during the installation process, especially if you are required to walk over carpets.

The panel must be located in a clean, dry position, which is not subject to shock or vibration and at least 2 metres away from pager systems or any other radio transmitting equipment. The operating temperature range is 0ºC to 40ºC; maximum humidity is 95%.

3.1 IMPORTANT NOTES ON BATTERIES:

DANGER*: Batteries are electrically live at all times, take great care never to short circuit the battery terminals.*

WARNING*: Batteries are often heavy; take great care when lifting and transporting batteries. For weights above 24 kilos, lifting aids should be used.*

DANGER*: Do NOT attempt to remove the battery lid or tamper with the internal workings of the battery. Electrolyte is a highly corrosive substance, and presents significant danger to yourself and to anything else it touches. In case of accidental skin or eye contact, flush the affected area with plenty of clean, fresh water and seek immediate medical attention.*

Valve Regulated Lead Acid (VRLA) batteries are "low maintenance", requiring no electrolyte top-up or measurement of specific gravity.

WARNING*: Only clean the battery case with a cloth that has been soaked or dampened with distilled water. Do not use organic solvents (such as petrol, paint thinner, benzene or mineral spirits) or other materials that can substantially weaken the case. Do not use a dry cloth as this will generate static electricity, which in turn may lead to an explosion.*

WARNING*: Avoid operating temperatures outside the range of -15°C/5°F to +50°C/122°F for float/standby applications.*

The recommended normal operating temperature is 20°C.

HIGH TEMPERATURE will reduce battery service life. In extreme cases this can cause Thermal Runaway, resulting in high oxygen/hydrogen gas production and battery swelling. Batteries are irrecoverable from this condition and should be replaced.

LOW TEMPERATURE will prolong battery life but reduce output capacity.

DANGER*: Do not incinerate batteries. If placed in a fire, the batteries may rupture, with the potential to release hazardous gases and electrolyte. VRLA batteries contain substances harmful to the environment.*

Exhausted batteries must be recycled. Return them to the battery manufacturer or take them to your Council waste disposal site for appropriate disposal.

ELECTRICAL SAFETY:

The volt-free relay contacts provided within the panel must not be used to directly switch any voltage that exceeds 50VAC or 75VDC. (Please also refer to relay rating data).

This equipment requires a 230V AC supply. All installation work should be carried out in accordance with the current edition of the IEE regulations by suitably qualified and trained personnel.

THIS PANEL MUST BE EARTHED

3.2 Installation Sequence

1. Unpack the control panel and locate the small plastic bag containing the following installation spares:
   a) End of line capacitors (22µF 35/40 volts – for Zone circuits only)
   b) End of line resistors (3K9 Ohms – for alarm circuits only)
   c) Spare mains fuse
   d) A set of battery leads (RED - positive, Black – negative, Blue - jumper lead)
2. Remove the terminal cover and display cover by means of the fixing screws. Place both covers carefully to one side (ideally inside the original packing box). Note that the mains transformer leads and Earth lead will need to be disconnected from the control board in order to remove the control board.
3. Offer the empty enclosure to the wall, mark and fix using fixings appropriate for the weight.
4. Connect 230V AC mains to the mains terminal block provided inside the enclosure, ensuring that the mains supply is isolated at the source. See diagram below for cable routing recommendations. The cable must be secured via the Cable Tie.

The cable must be protected by a 5A fuse at the source.

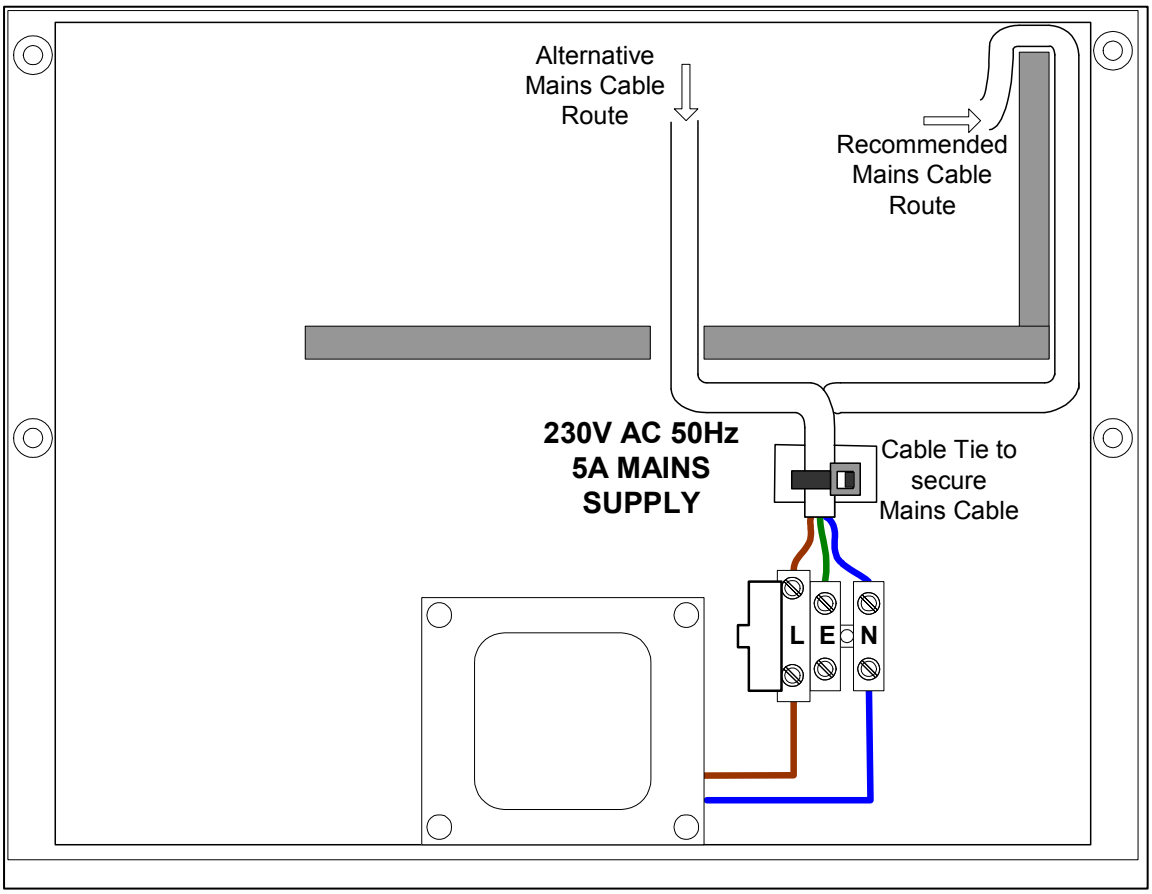

NOTE 1 – MAINS ISOLATION:

An appropriate lockable double pole disconnect device shall be provided as part of the building installation.

NOTE 2 – MAINS CABLES:

Use only mains cable compliant to BS6004, BS6500, or equivalent, within the following limits:

	Cable Diameter	Conductor Diameter
Minimum Dimensions	**4.0mm**	**1.0mm (0.8mm^2)**
Maximum Dimensions	**8.0mm**	**2.25mm (4.0mm^2)**

5. Gland the installation wiring into the enclosure using the cable entry holes provided in the removable gland plate. Leave the knockouts in any unused holes.
6. Fill in the Zone Identification label and insert it into the display cover from the rear of the display cover.
7. Fit batteries into the space provided. Only connect the blue battery link, **do not** connect the red and black battery leads to the batteries at this time.
8. Re-attach the display cover, ensuring that the low voltage secondary AC leads from the transformer and the earth lead from the mains terminal block pass through the cable channel to the upper section of the enclosure.
9. Connect the transformer secondary leads to the "AC IN" terminals. Connect the earth lead from the mains terminal block to "EARTH" (4 & 8 zone panels only). Ensure the earth lead to the gland plate is connected properly.

4. Panel Check

1. Ensure the mains supply has been inspected and tested in line with BS5839 Part 1 and the current IEE regulations. Ensure that the system is correctly earthed.
2. Leave all resistors and zone capacitors in place and switch on the 230 volts AC mains only. The control panel should react as follows:
   i) The GREEN "Supply Healthy" LED illuminates
   ii) The GREEN "Controls Active" LED illuminates
3. No other indications should be present at this time. If there are, identify the fault and rectify it by checking that the end-of-line devices are connected correctly in the terminals on each zone, alarm circuit and battery terminals. Also check that all DIL switches on the control board are in the OFF position.
4. Remove the resistor from the battery terminals on the control panel. The panel should react as follows:
   i) On 1 & 2 zone panels, the AMBER "General Fault" LED illuminates; on 4 & 8 zone panels, the AMBER "Batt Fault" LED illuminates
   ii) On 1 & 2 zone panels, the GREEN "Supply Healthy LED is extinguished.
   iii) The control panel internal buzzer sounds
   iv) The Fault Relay output operates
5. Connect the Red battery lead to the BATT+ terminal on the panel and connect the Black battery lead to the BATT- terminal on the panel. Connect the other end of the Red lead to the Red (+) terminal on one battery and connect the other end of the Black lead to the Black (-) terminal on the other battery. The control panel should react as follows:
   i) The buzzer silences and the fault indications are cleared
   ii) The GREEN "Supply Healthy" LED re-illuminates (1 & 2 zone panels)

6. Press and hold the “RESET SYSTEM” button on the display and check that the control panel reacts as follows:
   i) All LEDs on the display illuminate whilst the switch is operated
   ii) The internal buzzer sounds
7. Release the button and observe that the panel returns to it’s previous state.
8. Press the “SOUNDER TEST” button on the display and check that the control panel reacts as follows:
   i) The panel buzzer operates
   ii) 27.5VDC (nominal) can be measured across each of the alarm circuits
   iii) Press the “SOUNDER TEST” button again to return the panel to normal
9. Switch off the mains a.c. supply to the control panel and check that the control panel reacts as follows:
   i) On 1 & 2 zone panels, the “General Fault” LED illuminates and the “Supply Healthy” LED extinguishes; on 4 & 8 zone panels, the “Supply Healthy” LED flashes
   ii) The internal buzzer in the control panel sounds
   iii) The Fault Relay output operates
   iv) The “Supply Healthy” LED extinguishes

   Re-instate the mains a.c. supply and check that the panel returns to normal.
10. Check that the zone water leak detection circuits are monitoring the wiring for faults correctly, as follows:
    i) Open circuit (to simulate a break in the circuit wiring) – remove the negative leg of the zone capacitor
    ii) Short circuit (to simulate a short between cores) – reconnect the negative leg of the capacitor & short circuit the zone terminals (a small electrical spark may occur due to the charge in the capacitor).

    Simulate the faults described above and check that the control panel reacts as follows:
    i) The appropriate AMBER “Zone Fault” LED pulses
    ii) The internal buzzer on the control panel sounds
    iii) The fault relay operates
11. Check that the alarm circuits are monitoring the wiring for faults correctly, as follows:
    i) Open circuit - remove end-of-line resistor
    ii) Short circuit - replace resistor & short circuit the alarm circuit terminals

    Simulate the faults described above and check that the control panel reacts as follows:
    i) The “General Fault” LED illuminates (1 & 2 zone panels only)
    ii) The “Alarm Fault” LED illuminates (all panels)
    iii) The internal buzzer in the control panel sounds
    iv) The fault relay operates

5. Panel Configuration

WARNING: *The link labelled "*Link for Buzzer Enable*", located at the top of the PCB, is a non-monitored buzzer disable/enable facility. Its purpose is to disable the buzzer should the engineer find this necessary during commissioning.* ***DO NOT*** *remove this link unless there are exceptional circumstances, and* ***ALWAYS*** *check that it is in place before closing the cover.*

5.1 One Man Test: 1 & 2 Zone Panels

This Engineer's control is located on the top right hand corner of the PCB. The functions of the switch are described below.

One-man Test mode:- press and hold for more than 5 seconds. Check that the control panel reacts as follows:

i) "General Fault" LED flashes
ii) The fault buzzer sounds
iii) "Supply OK" LED flashes

Press the one-man test switch briefly to return panel to normal mode.

NOTE: The control panel will automatically de-select the one-man test after 10 minutes of non-operation.

5.2 One Man Test 4 & 8 Zone Panels

1. Enter the engineer's access code (5324), the "Controls Active" LED will flash. To exit engineer's mode, press 5. If no controls are operated for 10 seconds the panel will automatically exit engineer's mode.
2. One-man Test - with engineer's controls active, press 1 to enable One-man Test. Check that the control panel reacts as follows:
   i) "One-Man Test" LED flashes
   ii) The fault buzzer sounds
3. Press 1 again to clear.

NOTE: *The control panel will automatically de-select the one-man test after 10 minutes of inactivity.*

5.3 Earth Fault Enable/Disable (4 & 8 zone panels only)

With engineer's controls active, press **2** to enable/disable earth fault monitoring. When in engineer's mode, the "Earth Fault" LED will illuminate when earth fault monitoring is enabled.

5.4 Processor Fault Indication

1 & 2 Zone Panels:

If the processor stops, the "Proc. Fault" LED will illuminate. Press the "Processor. Reset" button (top right hand corner of the PCB) to re-start the processor. To clear the processor fault LED, press the "Proc. Fault Reset" button adjacent to the "Processor Reset button (make sure controls are enabled).

4 & 8 Zone Panels:

If the processor stops, the processor will be re-started automatically and the "Proc. Fault" LED will pulse. To clear the LED indication, first enter the engineer's access code (**5324**) and then press **4**.

5.5 Zone 1 Non-latch Configuration

Zone 1 can be configured to operate in a non-latching leak indication mode by setting the "Z1NL" DIL switch to the ON position.

In this mode, if a leak is detected on zone 1, the panel will indicate the condition and operate the alarms. The auxiliary fire relay contacts will **not** be operated. When the leak condition is cleared from zone 1, the zone 1 leak indication is cleared and, as long as no other zones have detected a leak, the alarms are also cleared. If any other zone is in a leak condition the panel will remain in the leak condition until manually reset.

The zone 1 non-latch enable switch is identified in section 2.3.

5.6 Zone Isolation

Zone Isolation can only be performed at the control panel. Enable the controls then follow the instructions below. Isolated zones are indicated by a steady amber fault LED.

1 & 2 zone panels:

(i) Press "Zone Isolate" to isolate zone 1

(ii) Press & hold "Zone Isolate" for more than 5 seconds to isolate zone 2

De-isolate the required zones using the same process.

4 & 8 zone panels:

(i) With controls active, press "ZONE ISOLATE". The Zone 1 Fault LED will pulse rapidly every 2 seconds (flashing cursor mode).

(ii) Press "ACCESS" (button 5) to move the cursor to the required zone.

(iii) Press "ZONE ISOLATE" to isolate or de-isolate the required zone.

(iv) Repeat (ii) and (iii) for any further zones.

(v) Press "RESET" to clear the flashing cursor mode.

6. Commissioning

6.1 Introduction

The following equipment should be available where possible to minimise the commissioning period:

i) VHF/UHF 2-Way Portable Radio System (for two engineers)

ii) Multi-meter capable of measuring voltages and resistances

6.2 Checklist

Before commissioning, the engineer should check the following:

i) All field wiring has been inspected and tested in accordance with the manufacturer's wiring recommendations and current IEE wiring regulations.

ii) All field cables are glanded into the control panel cabinet.

iii) No end-of-line devices are fitted (except at the panel terminals).

The following information should be available to the commissioning team:

(i) Zone detection layout drawings

(ii) Wiring schematic diagram

(iii) Installation manuals for all equipment connected to the system

Tracing wiring faults on long circuits that are routed through risers etc. can be difficult without prior knowledge of the wiring route.

It is recommended that the electrical installer is available until basic wiring continuity is proven. A minimum of 2 persons (e.g. engineer & mate) is recommended for efficient commissioning.

6.3 An Overview of the Commissioning Procedure

The approach to be used when commissioning a fire alarm system is to check each circuit and function in turn to ensure correct operation of the entire system. In this way any faults may be located quickly and accurately. The general procedure is as follows:

1. Alarm circuits should be checked first. The operation of each sounder should be checked for correct audibility as specified in BS5839 pt 1, using the “SOUNDER TEST” facility on the control panel.
2. Zone Leak Detection circuits should be commissioned next. The requirement is to verify the correct operation of each device and check for correct indication at the control panel.
3. Finally, any auxiliary circuits should be tested.

WARNING: *Before testing, the engineer must be aware both of the operation of all devices fitted to the auxiliary circuits and of the consequences of their operation.*

6.4 Pre-Commissioning Wiring Check

NOTE: *This pre-commissioning wiring check procedure should be followed in order to test all wiring prior to specific commissioning of any detection, alarm and auxiliary circuits.*

The following assumes that the control panel has been installed in accordance with the installation procedure and is powered with only the “Supply Healthy” and “Controls Active” LEDs illuminated. Do not connect field wiring at this stage.

1. Ensure that no devices are connected to the zone and alarm circuits but the cables are linked through at the device locations to achieve a continuous circuit.
2. Ensure that resistance of all cables to earth and between cores is more than 1MΩ. Check the following:

   i) Positive to earth resistance is greater than 1MΩ

   ii) Negative to earth resistance is greater than 1MΩ

   iii) Positive to negative resistance is greater than 1MΩ

   iv) Connect a wire link as the end-of-line device on each of the zone and alarm circuits. At the panel end, measure the resistance

across the positive & negative ends of the cables for each of the circuits; ensuring the value does not exceed 20Ω. Remember to remove the wire links after the tests.

3. Correct polarity throughout all circuits must be maintained. Rectify any faults.
4. All bells and leak detection devices should now be connected and the correct end-of-line devices fitted. Use the spare end-of-line devices supplied and leave the EOL devices in the panel terminals at this stage. Be very careful to maintain correct polarity at each device.

6.5 Alarm Circuits

After completion of the pre-commissioning wiring check, the following procedure should be followed:

1. Remove the resistor from the first alarm circuit terminal and connect the first alarm circuit wiring to the terminals, observing correct polarity. Check that any alarm fault indications clear after a few seconds.
2. Enter the access code to enable the controls and press the “SOUNDER TEST” button. Check that all sounders connected to the alarm circuit operate.
3. Press the “SOUNDER TEST” button again and check that the alarms silence.
4. Repeat steps 1 to 3 for the remaining alarm circuits.

6.6 Zone Circuits

NOTE: *Remember to enable the controls using access code 514 before using any of the controls.*

1. Remove the capacitor from the zone 1 terminals and connect the cables of the zone 1 circuit to the panel terminals, observing the correct polarity. Check that any zone 1 fault indications clear after a few seconds.
2. Check that the zone detection circuits are monitoring the wiring for faults correctly. To do this the end-of-line capacitor on the zone detection circuit must be placed into the following conditions:

   i) Open circuit (disconnect the EOL capacitor)

   ii) Short circuit (short circuit the EOL capacitor)

   Return the EOL capacitor to normal and check that the panel returns to normal.
3. At the first Hydrosense Point Detector on the zone, apply water across the detection pins and check the following:

   i) The correct zone Leak Detection LEDs pulse

   ii) The internal buzzer sounds

   iii) The alarms sound

   iv) The auxiliary fire relay operates

   v) The LED on the detector illuminates

   Remove the water and dry the pins. Press the “Silence Alarms” button and then the “Reset System” button on the panel’s display board and check that the control panel returns to it’s normal state.
4. Repeat step 3 for all Hydrosense Point Detectors on the zone.

5. Test the Hydrosense Hydrowire by applying water to it. Observe that:
   i) The zone 1 fire LEDs pulse
   ii) The internal buzzer sounds
   iii) The alarms sound
   iv) The auxiliary fire relay operates

   Dry the Hydrosense Hydrowire, press the “Silence Alarms” button and then the “Reset System” button on the panel’s display board and check that the control panel returns to it’s normal state.
6. Repeat step 5 every 5 metres along the Hydrowire.
7. Repeat steps 1 to 6 for the remaining zones, one zone at a time, until all the zones are commissioned.
8. Any faults that are found must be traced and rectified before proceeding.

6.7 Repeater Commissioning

Repeaters can only be used with the 4 and 8 zone panels.

Complete the panel commissioning before connecting the repeaters.

1. Power down the panel and connect the repeater to the panel as shown below:

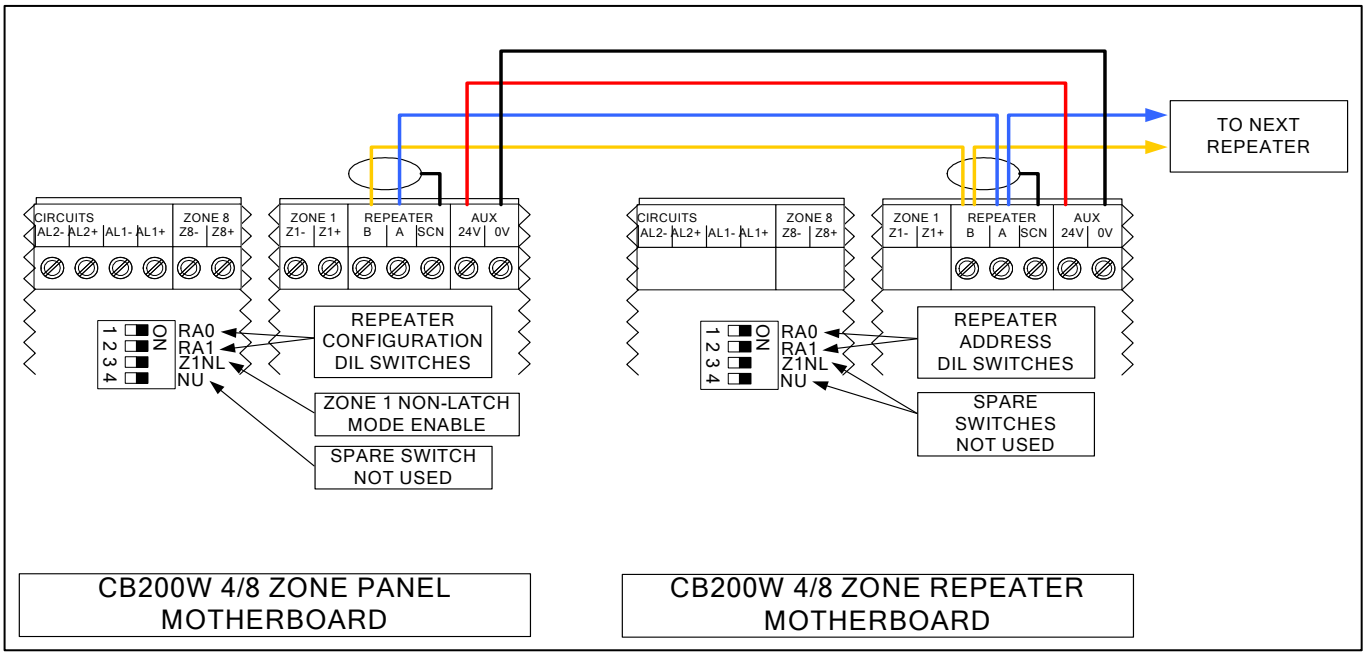

Notes:

i. Use only RS485 screened pair cable as specified in the appendix.

ii. Ensure that the cable screen is connected to the SCN terminal at both the repeater(s) and the panel, but DO NOT connect the cable screen to earth or 0V.

iii. Only one repeater can be powered from the AUX. 24V supply output of the panel.

2. Set the panel motherboard DIL switches as follows:

No repeaters	1 Repeater	2 Repeaters	3 Repeaters
1 2 3 4 ON RA0 RA1 Z1NL NU	1 2 3 4 ON RA0 RA1 Z1NL NU	1 2 3 4 ON RA0 RA1 Z1NL NU	1 2 3 4 ON RA0 RA1 Z1NL NU

3. Set the DIL switches on each Repeater to the correct addresses as shown below.

NOTE: Repeaters addressed as “0” will be disabled and will not communicate with the panel.

Repeater 0	Repeater 1	Repeater 2	Repeater 3
1 2 3 4 ON RA0 RA1 Z1NL NU	1 2 3 4 ON RA0 RA1 Z1NL NU	1 2 3 4 ON RA0 RA1 Z1NL NU	1 2 3 4 ON RA0 RA1 Z1NL NU

4. Power-up the Panel and then the Repeaters. Only the “Supply Healthy” and “Controls Active” LEDs should be illuminated on the Panel and Repeaters. Any repeaters with a built-in power supply should have the batteries connected at this time.
5. At Repeater 1, Press the “SOUNDER TEST” button. Check that the alarms operate and the internal buzzer operates on all repeaters.
6. Press the “SOUNDER TEST” button on the panel. Check that the alarm circuits silence and the internal buzzer silences on all repeaters.
7. Repeat steps 5 and 6 for each repeater.
8. Activate a Hydrosense point detector or Hydrowire on zone 1 and check for correct leak alarm indication at each repeater.
9. Press the “Silence Alarms” button on a repeater and check that the alarms are silenced and the internal buzzer pulses on all repeaters.
10. Press the “Reset System” button on a repeater and check that the panel and repeaters return to the quiescent state.
11. Repeat steps 8 to 10 for each zone and ensure “Silence Alarms” and “Reset System” operate correctly from each repeater.
12. Set the panel motherboard DIL switches RA0 & RA1 to OFF (No Repeaters). Check that all repeaters indicate a “Comms. Fault”.
13. Set the panel motherboard DIL switches RA0 & RA1 to back their previous settings and check that the repeaters return to normal.
14. Set the first repeater address to 0. Check that the panel indicates a “Repeater fault” and any additional repeaters display a steady “Comms fault” LED.
15. Set the first repeater address back to normal and check that the panel and repeaters return to normal.
16. Repeat steps 14 and 15 for any other connected repeaters.

6.8 Class Change Input Commissioning

1. Connect the class change switch to the class change input on the CB200W.
2. Operate the class change switch and observe:
   - i) The alarms sound
   - ii) The internal buzzer on the panel operates
   - iii) The internal buzzer on repeaters **does not** operate
3. De-activate the class change switch and observe:
   - i) The alarms silence
   - ii) The internal buzzer on the panel silences.

6.9 Auxiliary Circuits

All auxiliary circuits or equipment that is not supplied as a standard part of the fire alarm panel is the responsibility of the installer and must be tested for safe and correct operation by the commissioning engineer.

7. Technical Specifications

CB200W 1-2 zone control panel

Maximum field equipment load:	800mA
Auxiliary 24VDC output	250mA
Mains failed current consumption:	35mA @24VDC
Maximum battery charger output:	500mA @27.5 VDC
Common fire output:	Volt-free contacts - 1A, 30V DC max.
Common fault output:	Volt-free contacts - 1A, 30V DC max.
Alarm circuit output:	2 at 250mA each @28VDC
Battery size:	2 x 12V 2.1AH sealed lead acid
Weight (excluding batteries):	2.3kg

CB200W 4 zone control panel

Maximum field equipment load:	800mA
Auxiliary 24VDC output	250mA
Mains failed current consumption:	40mA @24VDC
Integral battery charger output:	500mA @27.5VDC
Common fire relay:	Volt-free contacts - 1A, 30V DC max.
Common fault output:	Volt-free contacts - 1A, 30V DC max.
Alarm circuit output:	4at 500mA each @28VDC
Battery size:	2 x 12V 2.1AH sealed lead acid
Weight (excluding batteries):	2.3kg

CB200W 8 zone control panel

Maximum field equipment load:	800mA
Auxiliary 24VDC output	250mA
Mains failed current consumption:	40mA @24VDC
Integral battery charger output:	500mA @27.5VDC
Common fire relay:	Volt-free contacts - 1A, 30V DC max.
Common fault relay:	Volt-free contacts - 1A, 30V DC max.
Alarm circuit output:	4at 500mA each @28VDC
Battery size:	2 x 12V 2.1AH sealed lead acid
Weight (excluding batteries):	2.4kg

CB200W 8 zone repeater panel with integral power supply

Auxiliary 24VDC output	250mA
Mains failed current consumption:	40mA @24VDC
Integral battery charger output:	500mA @27.5VDC
Battery size:	2 x 12V 2.1AH sealed lead acid
Weight (excluding batteries):	2.4kg

CB200W 8 zone repeater panel powered from panel

Current consumption:	40mA @24VDC
Weight	1.4kg

RS485 Cable Specification

Generic Type:	RS422/RS485 data cable.
Conductors:	Single pair plus screen.
Alpha cable:	3492C, 6222C, 6412 or equivalent
Belden cable:	8102, 8132, 9841 or equivalent

Hydrosense Point Detection Probe

Colour:	Black
Indicator:	Green LED
Connection:	4-pin DIN Socket
Cable:	Flying Lead with 4-pin DIN Plug
Maximum Devices per Zone:	20
Maximum distance between probes for perimeter detection:	3 metres
Probe Pin Height above floor:	1mm to 3mm (adjustable)
Maximum recommended coverage area:	$20m^2$

Hydrosense Hydrowire

Colour:	Black (sensing wire), Blue (Zone Supply)
Indicator:	Optional Remote LED Indicator
Cable:	5-metre or 10-metre sections with 4-pin DIN plug & 4-pin DIN socket
Maximum Cable Length per Zone:	50 metres
Minimum bend radius:	150mm
Recommended distance between cable for area protection:	2 metres

NOTE:

On 4 and 8 zone panels the total available current for field devices is 800mA at 28VDC. This current must be shared between the auxiliary 24VDC supply and the four alarm circuits such that the total current drain across the five circuits does not exceed 800mA.

WARNING:

A fuse protects the internal mains transformer on CB200 Panels and Repeaters; always replace this with the correct type and rating:

T1AH 250V **(20mm fuse, 1A, HBC, Anti-surge, approved to BS EN 60127 or equivalent.)**

8. Additional Available Documentation

Application Guide

User Instructions

9. ACCESS CODE Functions

The functions available at the USER and ENGINEER access levels are listed below.

1 & 2 Zone Panels:

USER ACCESS CODE: 5 1 4

USER CONTROLS:

1. Silence Buzzer
2. Silence Alarms
3. Manual Evacuate
4. System Reset
5. Zone Isolate/De-isolate

ENGINEER'S ACCESS CODE: No access code, the upper panel cover must be removed to gain access to the switches.

1. One-Man-Test ON/OFF
2. Processor Reset
3. Zone 1 Non-Latch Enable/Disable

4 & 8 Zone Panels:

USER ACCESS CODE: 5 1 4

USER CONTROLS:

1. Silence Buzzer
2. Silence Alarms
3. Manual Evacuate
4. System Reset
5. Zone Isolate/De-isolate (Panel only)

ENGINEER'S ACCESS CODE: 5 3 2 4

1. One-Man-Test ON/OFF (button 1) (Panel only)
2. Earth Fault Monitoring Enable/Disable (button 2) (Panel only)
3. Processor Fault Reset (button 4)

The following Engineer's functions are available by removing the upper panel cover and setting the DIL Switches:

1. Number of connected Repeaters/Repeater Address
2. Zone 1 Non-Latch Enable/Disable (Panel only)